Installing Your PROCON® Pump

Your PROCON® pump is a precision-built piece of equipment. Handle it carefully. PROCON® pumps should be installed only by qualified technicians.

NOTICE

When you install your pump, follow these guidelines:

- Do not hammer or mishandle your pump.
- Keep all foreign materials out of your pump.
- Never vise or grip the round body portion of the pump housing. Grip only the square inlet/outlet bosses when you install fittings. Always support the pump when you install fittings to avoid bending the V-band clamp even if the pump is already mounted to the motor.
- Make sure the power is off before working with an electric motor. If possible, lock out the power at a disconnect.
- Make sure you have an adequate, well-lit work space and use the correct tools.
- Do not use any components that are damaged or deformed. You should not have to force any parts together. If you receive parts that are damaged or deformed, call your PROCON factory representative.

We test every PROCON® pump at the factory for pressure and flow. If the pump has a relief valve, we set it to your specifications.

CAUTION

Do not tamper with the relief valve on your pump. If you think the relief valve needs to be reset, contact your PROCON factory representative.

We make every effort to ensure that your pump is of the highest quality. To get the most out of your pumpa, **read and follow these instructions carefully.**

For all motors--examining your pump before you get started

Before you install your pump, you must carefully unpack the pump and examine and prepare it to be installed. Follow these steps for all types of motors.

NOTICE

- Do not exchange one pump model for another. Pumps are carefully engineered to meet specific requirements and flow rates.
- All pumps within a series have the same housing. They may look alike, but they perform differently. Check the model number to make sure you have the correct pump before you install it.
- Using the wrong pump may damage your pump, your system, or your electric motor.

Do not remove the shipping plugs from the ports at the top of the pump until time to install fittings.

Examine the mounting surfaces on the pump.

1. Take the pump out of its shipping container.
   Do not remove the shipping plugs from the port until the fittings are ready to be installed. This will keep debris out of the pump.
   If the pump has a shaft coupling, remove the coupling and discard the foam shipping strip. Reinsert the coupling.
   Be careful when handling the pump; do not drop it or bang it. If you mishandle the pump, especially the shaft end, you can disrupt or damage internal clearances and impair performance of your pump.
2. Examine the mounting surfaces.
   Carefully remove any burrs or raised metal which may have occurred during unpacking and handling to make sure the pump will sit and be aligned properly.

Now you are ready to mount the pump to a motor. PROCON® pumps work with two types of electric motors -- a carbonator style motor (NEMA 48YZ frame) and a C-frame motor (NEMA 56C frame). Follow the steps for the type of motor you are using.

Mounting your pump on a 56C frame motor

You should have these parts:

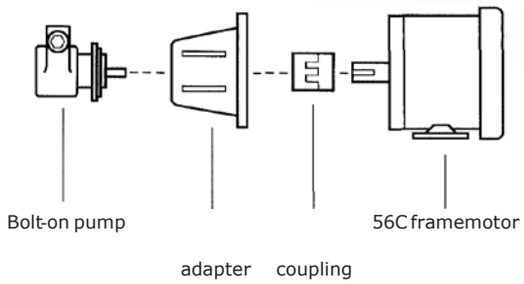

Bolt-on PROCON® pump motor adapter 3-piece drive shaft coupling 56C frame motor

Correctly assembling the coupling and the adapter, and mounting the pump is a trial and error process. You may have to try several times before you get it right. Follow these steps after you have examined your pump.

1. Mount the drive shaft coupling.
   a. Make sure motor is electrically disconnected and cannot accidentally turn on.
   b. Mount the half of the coupling for the motor onto the motor shaft and tighten the set screw.
   c. Insert the elastomer piece onto the motor piece.
   d. Mount the half of the coupling for the pump onto the pump shaft, but do not tighten the set screw.

Make sure the coupling slides easily onto the pump and the motor shaft -- do not force it. Make sure the shaft does not protrude into the space occupied by the elastomer piece. Series 6 pumps require a shaft key.

2. Mount the motor adapter onto the motor using four 3/8 inch dia. by 1 inch long bolts (16 threads/inch) and lock washers.
   Rotate the pump to orient the inlet/outlet ports as desired.
3. Trial mount the pump onto the motor adapter while simultaneously engaging the coupling pieces.
4. Check to make sure that the coupling is properly engaged.
5. Tighten the set screw on the pump coupling half.
6. Check your assembly.
   The elastomer coupling piece should have about 1/16 inch of play between the two metal pieces.
   If it does, go to step 7.
   If it does not, repeat steps 1 through 5, until the assembly is correct.
7. Fasten the pump to the adapter using three 1/4 inch dia.
   by 3/4 inch bolts (20 threads/inch) and lock washers. For Series 6 pumps, use two 3/8 inch dia. by 1 inch bolts (16 threads/inch).
8. Check to make sure that your motor rotates correctly.
   Motor rotation must correspond to the rotation arrow on the nameplate of the pump.

Arc-Zone.com, Inc. • 1331 Specialty Dr • Vista, CA 92081 • Tel. 1.760.931.1500
Email: info@arc-zone.com

Mounting your pump on a 48YZ frame motor

You should have these parts:

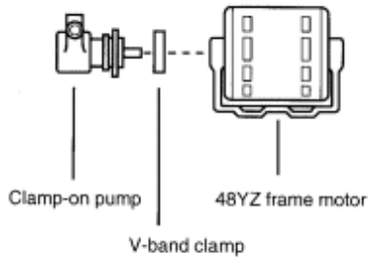

Clamp-on PROCON® pump PROCON V-band clamp 48YZ frame motor

After you have examined your pump for damage, follow these steps.

1. Make sure motor is electrically disconnected and cannot accidentally turn on.
2. Slip the V-band onto the motor ring flange .
3. Mount the pump to the motor by inserting the tang (shaft) of the pump into the slot on the motor.
4. Rotate the pump to orient the inlet/outlet ports as desired.
5. Make sure the ring flanges on the pump and on the motor are properly engaged and flush against one another.
6. Make sure the clamp is fully seated around the entire circumference of the pump and motor flanges.
7. Tighten the V-band clamp using 15 to 30 inch-pounds of torque.

Note:
Do not over tighten the clamp. The V-band clamp is designed to support the pump and fittings only. Loads caused by rigid plumbing or heavy attachments may result in misalignment.

Arc-Zone.com, Inc. • 1331 Specialty Dr • Vista, CA 92081 • Tel. 1.760.931.1500
Email: info@arc-zone.com

For all motors--installing the plumbing

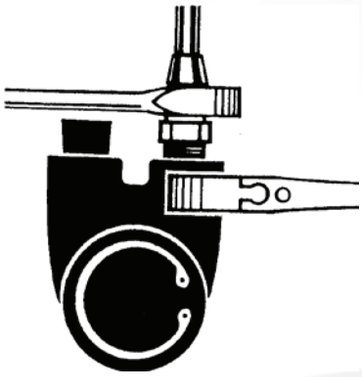

Use a backup wrench on the square port boss to support the pump.

When you finish mounting your pump on a motor, you must install the plumbing for the pump. Follow these steps after you have mounted your pump.

1. Install the inlet and outlet fittings.
   Support the pump by using a backup wrench on the square port bosses. Do not put any strain on the V-band clamp.
   Use brass fittings or plastic fittings on a brass pump. Use stainless steel or plastic fittings on a stainless steel pump. Using dissimilar metals can cause corrosion, which may get into the pump and cause damage.
   Use Teflon thread tape to install the fittings. Do not let any thread tape get into the pump and do not over-tighten the fittings.
2. Check the inlet line.
   Make sure that the inlet line is big enough to allow adequate flow to the inlet port of the pump (3/8 inch internal diameter for Series 1, 2, & 3 ; 1/2 inch internal diameter for Series 4 & 5; 1 inch internal diameter for the Series 6; all elevated temperature applications above 150°F must have oversized inlet piping).
   Make sure that the inlet line is clean and properly flushed out. Protect the pump with a 100 mesh or finer strainer or filter.
3. Connect the inlet line to the fitting on the pump.
4. Connect the outlet line to the fitting on the pump.

Using PROCON® Pumps Safely

Learn to recognize safety information, and always follow recommended precautions and safe operating practices.

When you see this safety-alert symbol, be alert to the potential for causing personal injury or property damage.

This catalog uses the following words to identify hazards and potential problems:

This word:	Means this:
WARNING	You may seriously hurt or kill yourself or someone else if you ignore the message.
CAUTION	You may hurt yourself or someone else or you may damage your equipment if you ignore the message.
NOTICE	Pay special attention to this important installation, operation, or maintenance information. If you ignore this information, you may damage your pump.

Safety warnings for your pumps

Read these safety warnings before you install or operate PROCON® pumps. Be sure to follow the instructions carefully.

Do not pump flammable or hazardous fluids through your pump

Your pump was not designed to be used with flammable or otherwise hazardous fluids. If you use your pump with hazardous fluids and it leaks, it could create various hazards including fire, health, environmental, etc.

Do not use a pump that is leaking

If a pump begins to leak, stop using it immediately. Disconnect the power to the pump motor and clean up the fluid. Leaking pumps should no longer be used; replace with new pump or have pump rebuilt.

Keep your pump from leaking by following these three rules:

1. **Do not let the pump run dry.**
   Do not Jet the pump run dry for more than 2 minutes. The self-lubricating, internal parts protect the pump only against very brief dry runs .
   Running the pump dry may score or wear out the internal parts, causing performance loss. It may also damage the mechanical seal, causing the pump to leak fluid.
2. **Do not run the pump against a closed discharge.**
   Running a pump against a closed or blocked discharge may cause pressure to build up to a dangerous level if there is no relief valve.
   Heat will build up in the pump and may cause the internal parts to wear out rapidly. It may also ruin the mechanical seal.
   PROCON's relief valves are designed to protect your pump against only short periods of over-pressure. PROCON's relief valves should not be used as flow control valves.
3. **Do not tamper with the setting of the relief valve.**
   The relief valve is set at the factory to your specifications.

Keep the floor around your pump dry

Make sure you keep the floor around your pump dry. If any liquid leaks onto the floor, clean it up immediately.

Serious injury can occur if you slip.

Do not touch the pump when there is liquid on the floor

Your pump operates with an electric motor. You can be electrocuted if you touch the pump when you are standing in liquid.

You can increase your safety by using "ground fault interrupter (GFI)" type circuit breakers.

Protect children

Keep children and other people who do not know how to operate the pump away from your pumps and the systems in which they are used. Children may not understand that equipment is sometimes dangerous to them and others.

Never allow children to play with or operate your pumps.

Be prepared for emergencies

Be prepared for fires, injuries, or other emergencies.

Keep a first aid kit and a fire extinguisher near the pumps and the systems in which they are used.

Keep emergency numbers for doctors, ambulance services, hospitals, and the fire department near your telephone.

Know how and where to disconnect power to the pump motor.

A note to all employers

Know your responsibilities as an employer.

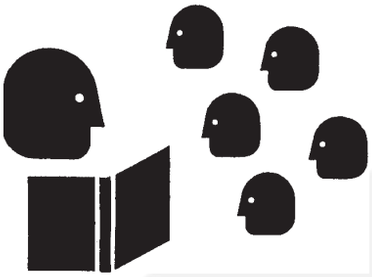

- Make sure your employees know how to operate the pumps safely.
- Make sure your employees are aware of the safety warnings in this catalog.
- Thoroughly train your employees about operating the pumps and other equipment safely.
- Keep the pumps in proper working condition. If you make unauthorized modifications to a pump, you may reduce the function and safety of the pump.
- Communicate all PROCON safety information to your customers.

Series 1 Rotary Vane Pump
Clamp-On Style

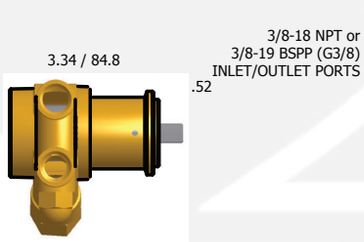

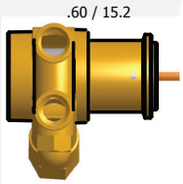

1143 Bronze Coupling

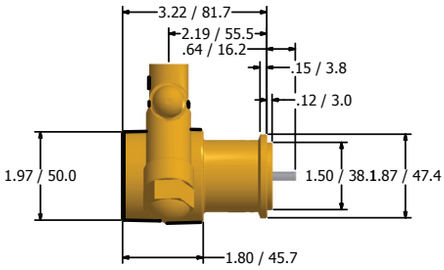

"A" Mounting

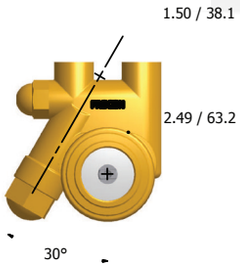

1.19 / 30.2

2.28/57.9

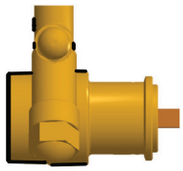

"B" Mounting with 1143
Bronze Coupling

Arc-Zone.com, Inc. • 1331 Specialty Dr • Vista, CA 92081 • Tel. 1.760.931.1500
Email: info@arc-zone.com

Series 1, 2, & 3 Pumps
Positive Displacement Rotary Vane Pump
Flow ranging from 15 to 140 gallons per hour at discharge up to 250 psi
Self Priming
Maintenance Free
Low Vibration and Pulsation Characteristics

Clamp-on or bolt-on available
Stainless Steel, Brass and Low Lead Brass (0.20% Max Lead)
Patented Relief Valve Configuration
Models compatible with 48YZ Frame and 56C Frame Motors
Low Vibration and Pulsation Characteristics *(Adopter and Coupling required for 56C Frame Mounting)*

SPECIFICATIONS	
Body Material	Type 303 stainless steel or brass
Capacity	15 to 125 GPH
Nominal Speed	1725 RPM
Typical Horsepower Required	.25 to .50 HP
Maximum Discharge Pressure	250 PSI
Rotation (viewed from nameplate end)	Clockwise
Dry Weight	Approximately 2.5 lbs.
Dimensions	3.56”x 3.49”x 3.86”
Self Priming (water)	6 ft. Maximum Lift
Port Size	3/8 NPT Inlet and Outlet

TYPICAL APPLICATIONS
Carbonation
Espresso/Coffee
Welding
Cold Carb Circulation
Reverse Osmosis
Beer Chillers
Pesticide Systems
Solar Applications

Arc-Zone.com, Inc. • 1331 Specialty Dr • Vista, CA 92081 • Tel. 1.760.931.1500
Email: info@arc-zone.com

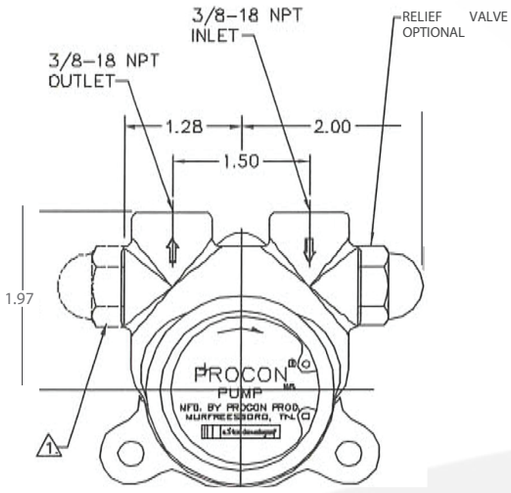

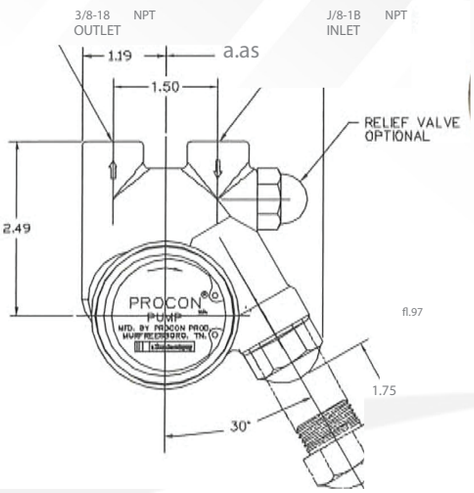

SERIES 1, 2 & 3 Nominal Volume at 1725 RPM (See note on Series 6)										
FLOW RATE (GPH)	GALLONS PER HOUR					BRAKE HORSEPOWER				
	PRESSURE (PSI)					PRESSURE (PSI)				
	50	100	150	200	250	50	100	150	200	250
140	143	141	139	137	135	.17	.28	.40	.52	.63
125	128	126	124	122	120	.16	.26	.36	.47	.57
110	111	109	107	105	103	.15	.25	.34	.44	.54
100	102	100	98	96	94	.13	.20	.28	.35	.42
80	82	80	78	76	74	.12	.18	.25	.32	.39
70	72	70	68	66	64	. 11	.17	.24	.30	.37
60	62	60	58	56	54	.10	.16	.23	.29	.35
50	52	50	48	46	44	.09	.15	.21	.27	.33
35	37	35	33	31	29	.08	.14	.19	.24	.29
25	27	25	23	21	19	.07	.12	.17	.22	.27
15	17	15	13	11	-	.06	.10	.15	.19	-

Serles 1 • 6 Rotary Vane pumps - Model Number Matrix

1 1 1 A 100 F 1 1 A A 180

PRODUCT CLASSIFICATION
1 - ROTARY VANE PUMP

AGENCY APPROVALS
0 - NON-FOOD GRADE (1.5% Max. Lead)- NO AGENCY APPROVAL
1 - NSF STD. 169 LISTED (1.5% Max Lead) - (SEE NOTE 1)
2 - WRC
3 - FOOD GRADE - (1.5% Max. Lead) NO AGENCY LISTING
P - SPARE PARTS KIT
Z - NON-FOOD GRADE (.20% Max. Lead)- NO AGENCY APPROVAL
4 - NSF STD. 169 LISTED (.20% Max. Lead) - (SEE NOTE 1)
Y - NON-FOOD GRADE (.10% Max. Lead)- NO AGENCY APPROVAL
5 - NSF STD. 169 LISTED (.10% Max. Lead) - (SEE NOTE 1)
W - 254 SMO (316 S/S) - NO AGENCY APPROVAL

SERIES
1 - SERIES 1 BRASS - INTEGRAL STRAINER
2 - SERIES 2 BRASS
3 - SERIES 3 STAINLESS STEEL
4 - SERIES 4 BRASS
5 - SERIES 5 STAINLESS STEEL
6 - SERIES 6 STAINLESS STEEL
7 - SERIES 7 BRASS MINI PRO
8 - SERIES 8 STAINLESS STEEL - INTEGRAL STRAINER
9 - SERIES 9 BRASS SHORT PUMP

MOUNTING AND DRIVE CONFIGURATION
A - CLAMP ON WITH .188" DOUBLE FLAT DRIVE
B - CLAMP ON WITH 1143 BRONZE COUPLING
C - CLAMP ON WITH 1143-2 PLASTIC COUPLING
D - CLAMP ON WITH SLOTTED SHAFT ONLY - NO COUPLING
E - BOLT ON WITH SINGLE FLAT DRIVE (SERIES 1-5 ONLY)
J - BOLT ON WITH .25 DOUBLE FLAT DRIVE (SEE NOTE 2)
K - BOLT ON WITH 3018 BRONZE COUPLING
L - BOLT ON WITH 3018-1 OVERSIZE BRONZE COUPLING
M - BOLT ON WITH SLOTTED SHAFT ONLY
N - BOLT ON WITH KEY SLOT DRIVE (SERIES 6 ONLY)
P - CLAMP ON WITH 1143-3 OVERSIZE BRONZE COUPLING
R - LONG CLAMP ON WITH DOUBLE FLAT DRIVE (SEE NOTE 11)
S - CLAMP ON WITH SINGLE FLAT DRIVE
T - BOLT ON WITH FAEMA STYLE MOUNT

FLOWRATE (SEE NOTE 10)

SERIES 1, 2 AND 3

015 - 15 GPH	(45 LPH)
025 - 25 GPH	(75 LPH)
035 - 35 GPH	(100 LPH)
050 - 50 GPH	(150 LPH)
060 - 60 GPH	(180 LPH)
070 - 70 GPH	(210 LPH)
080 - 80 GPH	(240 LPH)
100 - 100 GPH	(300 LPH)
110 - 110 GPH (HIGH FLOW)	(330 LPH)
125 - 125 GPH (HIGH FLOW)	(375 LPH)
140 - 140 GPH (HIGH FLOW)	(425 LPH)

SERIES 4 AND 5

115 - 115 GPH	(350 LPH)
140 - 140 GPH	(425 LPH)
165 - 165 GPH	(500 LPH)
190 - 190 GPH	(575 LPH)
215 - 215 GPH	(650 LPH)
240 - 240 GPH	(725 LPH)
265 - 265 GPH	(800 LPH)
330 - 330 GPH (HIGH FLOW) - NO RELIEF VALVE	(1000 LPH)

SERIES 6

300 - 300 GPH - NO RELIEF VALVE	(900 LPH)
360 - 360 GPH - NO RELIEF VALVE	(1080 LPH)
420 - 420 GPH - NO RELIEF VALVE	(1260 LPH)
480 - 480 GPH - NO RELIEF VALVE	(1440 LPH)
540 - 540 GPH - NO RELIEF VALVE	(1620 LPH)
600 - 600 GPH - NO RELIEF VALVE	(1800 LPH)
660 - 660 GPH - NO RELIEF VALVE	(2000 LPH)

PRESSURE SETTING (RELIEF VALVE) (SEE NOTE 5)
PRESSURE SETTING IN PSI (POUNDS PER SQ. IN.)

PRESSURE RANGE (RELIEF VALVE SPRING)
A - 151 TO 250 PSI - DEFAULT SETTING 170 PSI (SEE NOTE 4)
10 to 17 BAR - DEFAULT SETTING 14 BAR
B - 100 TO 150 PSI - DEFAULT SETTING 130 PSI
7 TO 10 BAR - DEFAULT SETTING 10 BAR
C - 40 TO 99 PSI - DEFAULT SETTING 99 PSI
4 TO 7 BAR - DEFAULT SETTING 7 BAR
D - 30 TO 59 PSI - DEFAULT SETTING 50 PSI (SEE NOTE 6)
2 TO 4 BAR - DEFAULT SETTING 3.5 BAR
X - NO SETTING

VALVE TYPE AND CONFIGURATION
A - PLASTIC, HI TEMP-BYPASS
B - PLASTIC, HI TEMP-SOLID
C - PLASTIC, HI TEMP BALANCED BYPASS
D - PLASTIC, HI TEMP BALANCED SOLID
F - PLASTIC, HI TEMP-EXTERNAL ADJUST BYPASS
G - PLASTIC, HI TEMP-EXTERNAL ADJUST SOLID
P - BRASS, HI TEMP-SOLID
R - STAINLESS STEEL, HI TEMP-SOLID
1 - PLASTIC, LOW TEMP-BYPASS
2 - PLASTIC, LOW TEMP-SOLID
3 - PLASTIC, LOW TEMP BALANCED BYPASS
4 - PLASTIC, LOW TEMP BALANCED SOLID
5 - PLASTIC, LOW TEMP-EXTERNAL ADJUST BYPASS
6 - PLASTIC, LOW TEMP-EXTERNAL ADJUST SOLID
X - NO RELIEF VALVE

CLEARANCES
1 - STANDARD CLEARANCE
2 - SPCL CLEARANCE (1x) LINER & BRGS
3 - SPECIAL CLEARANCE (2x) LINER & (1x) BRGS.
4 - STANDARD CLEARANCE WITH SEAL CIRCULATION
5 - SPCL CLEARANCE (1x) LINER AND (1x) SEAL CIRC. BRGS.
6 - SPCL CLEARANCE (1x) LINER AND (2x) SEAL CIRC. BRGS.

ROTATION / SLINGER / PASSIVATION / STRAINER
1 - CLOCKWISE
2 - COUNTERCLOCKWISE
3 - CLOCKWISE / SLINGER
4 - COUNTERCLOCKWISE / SLINGER
7 - CLOCKWISE / COARSE STRAINER
8 - CLOCKWISE / SLINGER / COARSE STRAINER

ELASTOMER
F - FDA GRADE NITRILE - TYPE 21 OR TYPE 2166 USED INTERCHANGEABLY
G - ETHYLENE PROPYLENE - TYPE 21 SEAL (SEE NOTE 8)
R - FLUOROCARBON - TYPE 21 SEAL
S - NEOPRENE - TYPE 21 SEAL (SEE NOTE 9)
W - ETHYLENE PROPYLENE - TYPE 21 SEAL - WRC APPROVED COMPOUND

NOTES:
1. Brass pumps are NSF listed for potable water only. Stainless steel pumps are NSF listed for potable and carbonated water. (Nitrile elastomer only.)
2. Bolt on model with .25" double flat drive for use in Japan only. (No NSF available.)
3. Counterclockwise rotation not available for Series 1 pumps.
4. For the Beverage Industry - the default relief valve pressure setting is 250 PSI.
5. The relief valve pressure setting is not part of the model matrix number. It is for customer reference only.
6. This pressure range is not available in valve configurations C, D, K or L.
7. Passivation is defined as a passivated housing only. No other parts are passivated.
8. The EP elastomer is no longer available for Series 6 pumps.
9. Neoprene elastomer not available for the following relief valve configurations: C, D, F, 3, 4, 5, and 6.
10. GPH rating at 60HZ (1750 RPM) - LPH rating at 50HZ (1400 RPM).
11. Long clamp on pumps are series 1 and 4 only

Dwg #2033 Rev EE MEA 9-1-09

Series 1 Repair Kit

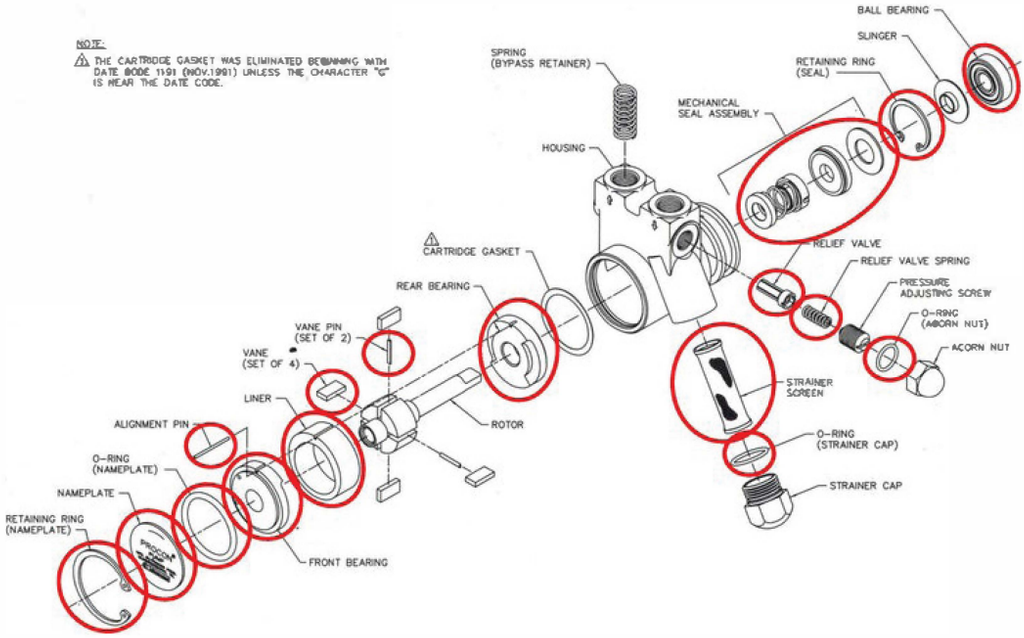

Troubleshooting Tips for PROCON® Pumps

WARNING

Before you try to work on the pump or the system, turn the motor off and disconnect the power to the motor.

Problem	Possible cause	Possible solution
Pump is working below its capacity	inlet is clogged or restricted internal strainer is clogged or restricted	Clean out the inlet line. If you have an inlet filter or internal strainer, clean it (replace it if more than 20% clogged). Do not allow debris to fall into pump from filter.
	pump is rotating in the wrong direction	Change motor rotation by properly rewiring it.
	low motor rpm	Check your motor to make sure it is working properly and that it is wired for the voltage and frequency (50 or 60 HZ) that you are using. (See motor specification plate.)
	inside of the pump is wearing out, caused by foreign or abrasive materials getting into the pump	Have the pump rebuilt by PROCON. To prevent future failures, make sure you have an adequate filter on the inlet line.
	relief valve setting is incorrect	Contact your PROCON representative about having the relief valve reset.
Pump is leaking	mechanical shaft seal or rubber 0-ring is failing	Have the pump rebuilt by PROCON.
	relief valve cap or strainer cap is loose	Tighten the cap on the relief valve or strainer.
	relief valve cap or strainer cap o-ring or gasket are damaged	Replace the damaged o-ring or gasket. Contact PROCON for these parts.
	inlet or outlet port fittings are loose or sealant failed	Apply joint compound or tape and reinstall the fittings. Do not allow sealant to fall into pump.

Arc-Zone.com, Inc. • 1331 Specialty Dr • Vista, CA 92081 • Tel. 1.760.931.1500
Email: info@arc-zone.com

Problem	Possible cause	Possible solution
Pump is noisy	inlet is clogged or restricted internal strainer is clogged or restricted	Clean out the inlet line. If you have an inlet filter or internal strainer, clean it (replace it if more than 20% clogged). Do not allow debris to fall into pump from filter.
	acorn nut on the relief valve or strainer cap is loose	Tighten the acorn nut on the relief valve or the strainer cap.
	gasket or 0-ring on the acorn nut or strainer cap is defective	Replace the gasket or the 0-ring on the acorn nut or the strainer cap. Do not tamper with the relief valve setting. Contact PROCON for parts.
	coupling, mounting bolt, or V-band clamp is loose	Turn off the motor and disconnect the power to the motor. Then, properly align and tighten the loose component.
	the pump and the motor are misaligned	Turn off the motor and disconnect the power to the motor. Remove the pump from the motor. Then remount the pump onto the motor, making sure you align it properly.
Motor is stalling or overloads are tripping out	the pump and the motor are misaligned	Turn off the motor and disconnect the power to the motor. Remove the pump from the motor. Then remount the pump onto the motor, making sure you align it properly.
	lime and mineral deposits in the pump are causing internal binding	Have the pump rebuilt by PROCON.
	motor may be defective	Contact your motor supplier.
	motor may be wired for wrong voltage	Check wiring against wiring diagram supplied with the motor.

Arc-Zone.com, Inc. • 1331 Specialty Dr • Vista, CA 92081 • Tel. 1.760.931.1500
Email: info@arc-zone.com